Solar and Electric **Water Heaters**

Chromagen is a leading international manufacturer of solar and electric water heaters, combining the most advanced technology and traditional heating methods. Our products incorporate state-of-the-art engineering, rugged construction and select materials, resulting in efficient and durable products.

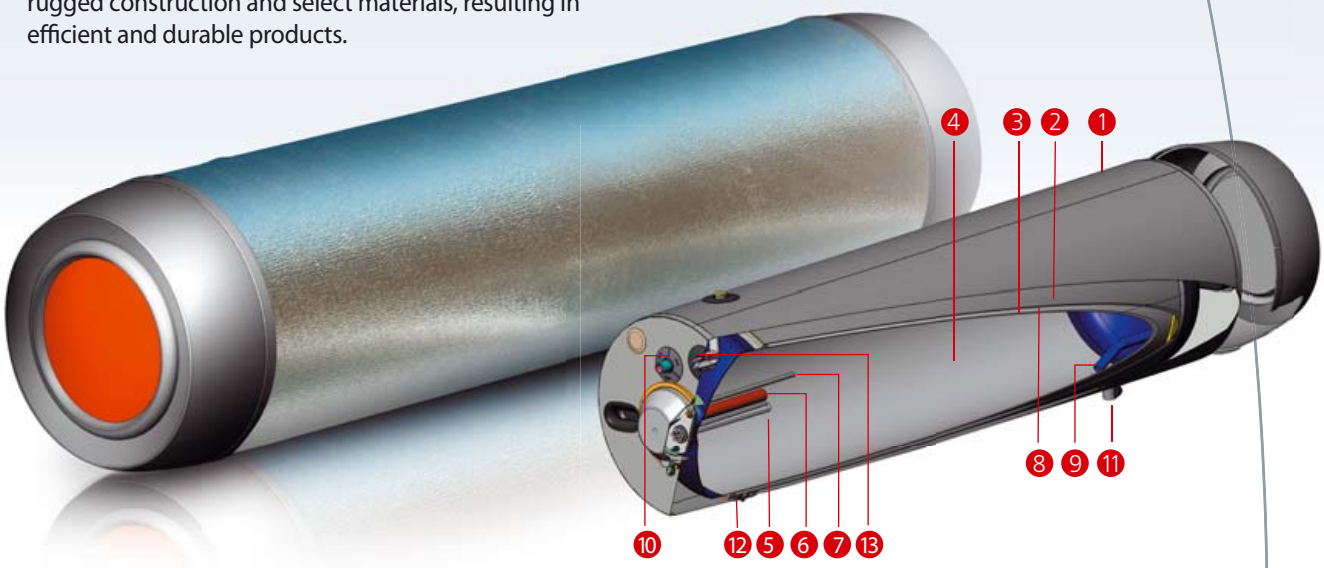

300L horizontal storage tank
Double jacket heat exchanger
Aluminium external envelope

1. External Coating
Polyester coating provides extreme durability and an attractive finish.

2. Insulation
A thick polyurethane insulation layer ensures optimal insulation and heat retention.

3. Storage Tank
Constructed with a thick steel, automatically welded ensuring precision and permitting a working pressure of 8 bar.

4. Enamel Coating
An internal glass-enamel layer protects against corrosion.

5. Electric Element
Energy-efficient electric element with rapid heating time enables the provision of hot water 24 hours a day, 365 days a year.

6. Sacrificial Anode
Provides anti-corrosion protection.

7. Thermostat
A built-in thermostat ensures that the water temperature inside the tank does not exceed a preset temperature, while using the electric element.

8. Double Jacket Heat Exchanger

9. Cold Water Inlet

10. Hot Water to User

11. Heat Exchanger Inlet

12. Heat Exchanger Outlet

13. Heat Exchanger Safety Valve

CHROMAGEN

www.chromagen.biz

Chromagen's wide selection of tanks are environmentally friendly and energy efficient.

Available in a range of sizes from 30 to 300 liters. The horizontal or vertical orientation options enable flexible installation to fit customer's changing needs.

The tank is a part of Domestic Hot Water System

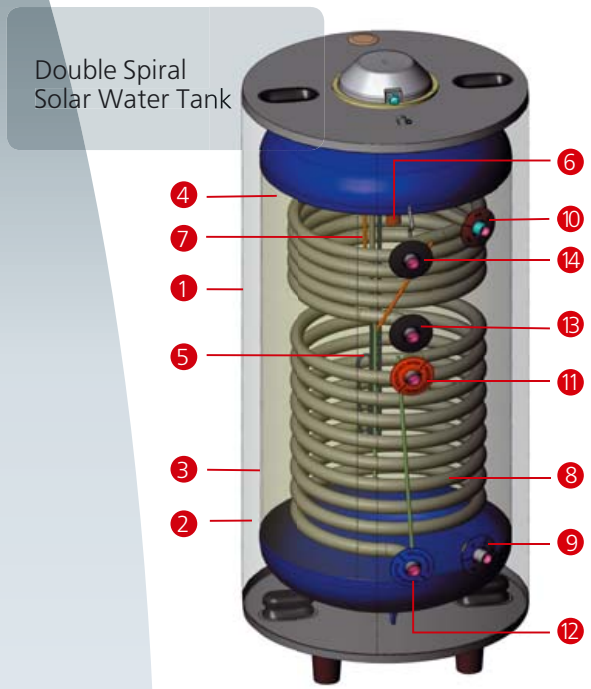

1. External Coating
2. Insulation
3. Storage Tank
4. Enamel Coating
5. Electric Element
6. Sacrificial Anode
7. Thermostat
8. Spiral Heat Exchanger
9. Cold Water Inlet
10. Hot Water to User
11. Heat Exchanger Inlet
12. Heat Exchanger Outlet
13. Auxiliary Heating Outlet
14. Auxiliary Heating Inlet

Chromagen's Tanks: General Information

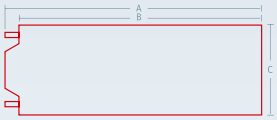

(*) Storage tanks weight refers to painted galvanized envelope and common heat exchanger size.

Tanks weight might change due to envelope type change or heat exchanger size change upon request.

Solar Tanks

Capacity (l)	A (mm)	B (mm)	C (mm)	Weight (kg)*	Electric Element (watt)
120	850	790	560	46	2500w
150	1010	950	560	53	2500w
200	1270	1210	560	65	2500w
300	1420	1360	650	91	2500w, 3000w, 3600w

Solar and Electric Tanks with Double Jacket Heat Exchanger

Capacity (l)	A (mm)	B (mm)	C (mm)	Weight (kg)*	Electric Element (watt)
120	1245	1185	477	74	2500w
150	1010	950	585	75	2500w
200	1270	1210	585	93	2500w
300	1420	1360	690	133	2500w, 3000w

Solar and Electric Tanks with Spiral Heat Exchanger

Capacity (l)	A (mm)	B (mm)	C (mm)	Weight (kg)*	Electric Element (watt)
Single Spiral Tank					
150	1,020	950	585	68	2500w, 3600w
200	1,280	1,210	585	75	2500w, 3600w
300	1,420	1,360	650	117	2500w, 3600w
Double Spiral Tank					
200	1,280	1,210	585	90	2500w, 3600w
300	1,420	1,360	650	145	2500w, 3600w

Electric Tanks

Capacity (l)	A (mm)	B (mm)	C (mm)	Weight (kg)*	Electric Element (watt)
30	670	560	360	23	2500w
45	885	780	360	29	2500w
60	740	675	477	31	2500w
80	905	845	477	40	2500w
120	850	790	585	46	2500w
120	1245	1185	477	50	2500w
150	1010	950	585	53	2500w
200	1270	1210	585	65	2500w
300	1420	1360	585	91	2500w, 3000w

• Tanks for horizontal or vertical mounting are available. All tanks are tested at a pressure of 15 bar, with a permitted working pressure of up to 8 bar.

• Due to on-going developments, specifications are subject to changes without early notice.

Sha'ar Ha'amakim 30097, Israel | **tel:** 972 4 9839456 **fax** 972 4 9839246 | **chromagen @chromagen.biz**